DWG.No.	MR30084B1
TITLE	Mass Flow Meter MODEL 3100
CUSTOMER	

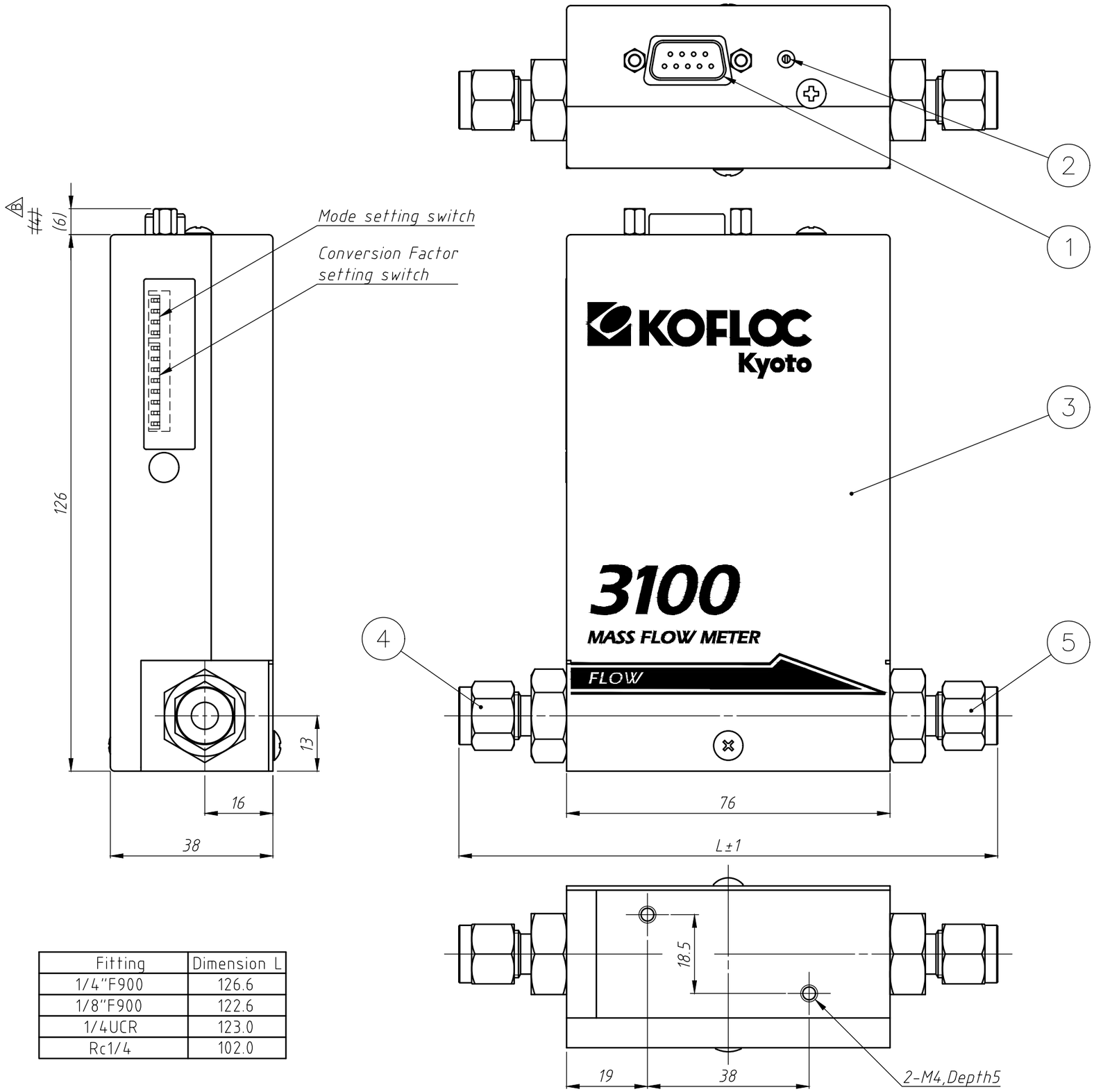

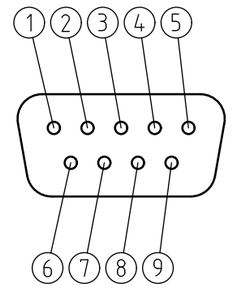

D-sub connector

Pin No.	Signal Name
1	NC
2	Output Signal
3	Power +15VDC
4	Power Common
5	Power -15VDC
6	NC
7	Signal Common
8	NC
9	NC

Fitting	Dimension L
1/4"F900	126.6
1/8"F900	122.6
1/4UCR	123.0
Rc1/4	102.0

No.	Name	Specification	Note
5	Outlet Fitting		
4	Inlet Fitting		
3	Cover		
2	Zero Adjustment		
1	Connector	D sub 9 Pin(male)	

SCALE	1 : 1	PROJECTION	

Rev.		
B	Changed cover shape	2025.12.22

KOFLOC Corp.

DESIGNED	DRAWN	CHECKED	APPROVED
----	S.Ou		

DATE	06 / Jun / 2019